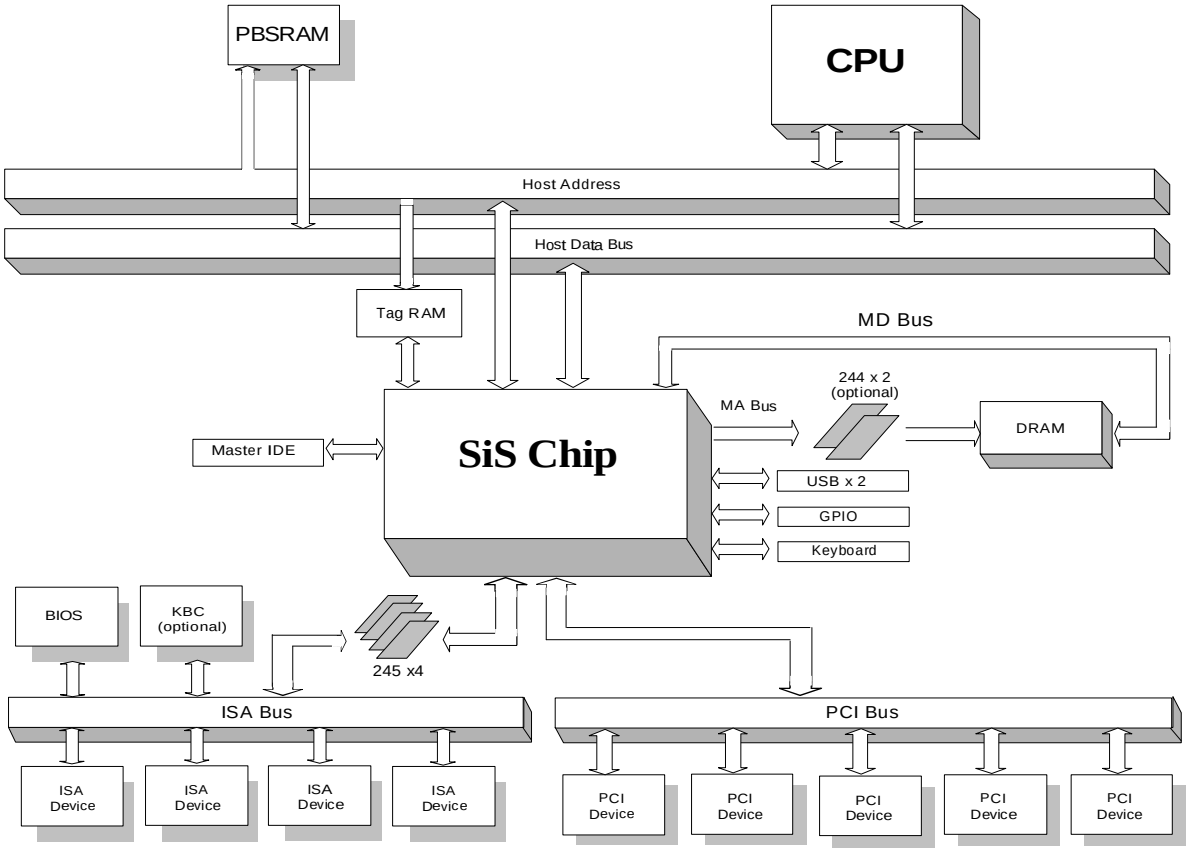
PBSRAM
CPU
Host Address
Host Data Bus
Tag RAM
MD Bus
244 x 2
(optional)
MA Bus
DRAM
Master IDE
SiS Chip
USB x 2
GPIO
Keyboard
BIOS
KBC
(optional)
245 x4
ISA Bus
PCI Bus
ISA
Device
ISA
Device
ISA
Device
ISA
Device
PCI
Device
PCI
Device
PCI
Device
PCI
Device
PCI
Device